An Overview of the New Laboratory Information Management System (LIMS) at the Public Health Laboratory

Dan Andrews, MS, MT(ASCP)
Section Chief, Bacteriology/TB Laboratory
Utah State Public Health Laboratory

- Will cover the Bureau of Microbiology only
- History of LIMS in the Bureau
- What previous systems could do
- The New System
- What it does
- What it can do

Bureau of Microbiology

- Bacteriology/Tuberculosis
- Immunology
- Molecular Biology / BT
- Newborn Screening
- Virology

Laboratories Using New LIMS

- Bacteriology/Tuberculosis
- Molecular Biology / BT
- Newborn Screening
- Virology / Immunology
- Toxicology
- Environmental Microbiology

In the Beginning

Previous LIMS

- Store patient demographics
- Store patient test results
- Send report to provider
- Send special reports to Public Health Departments*
- Query database tables

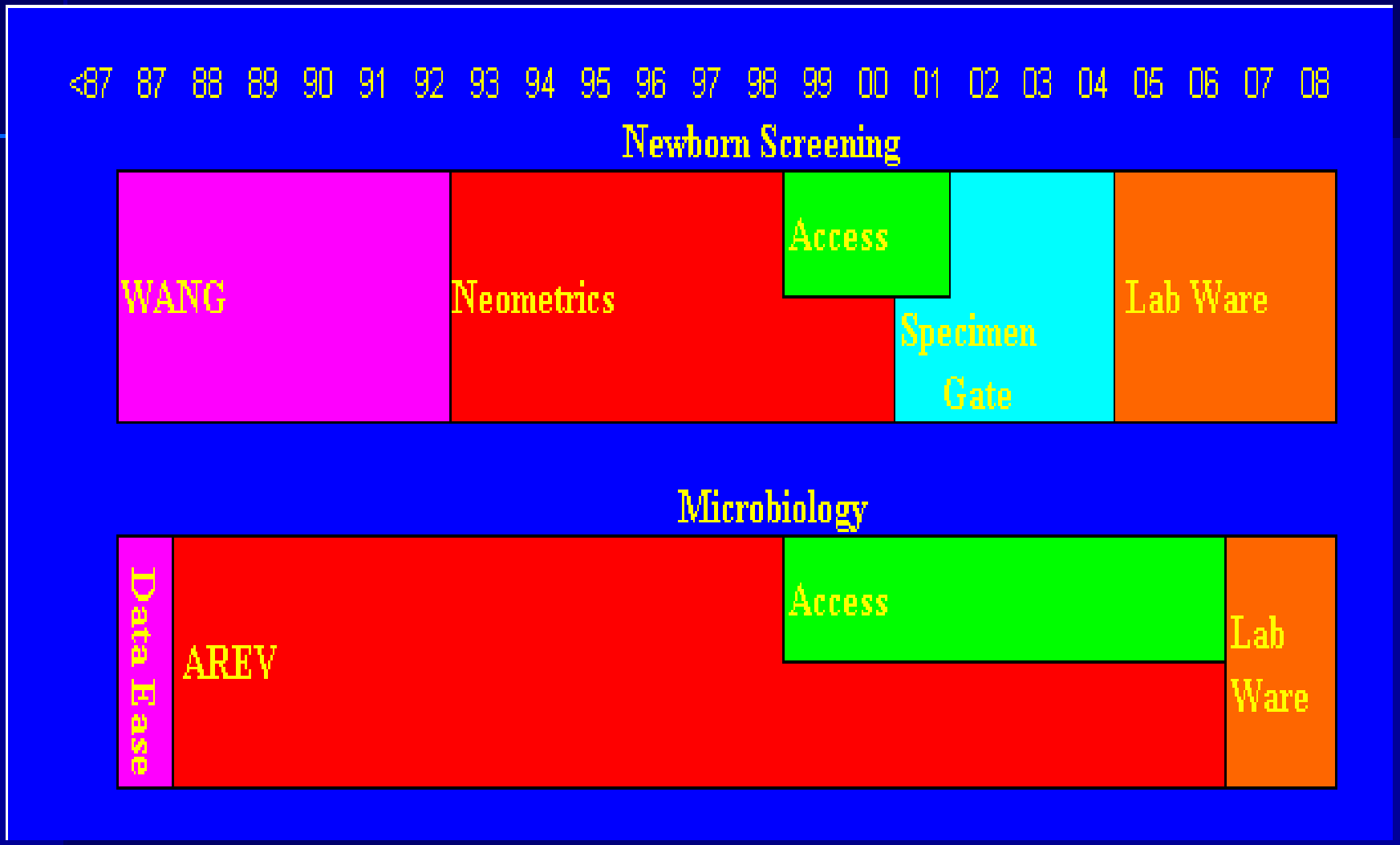
<87 87 88 89 90 91 92 93 94 95 96 97 98 99 00 01 02 03 04 05 06 07 08
Newborn Screening
WANG
Neometrics
Access
Specimen Gate
Lab Ware
Microbiology
Data Ease
AREV
Access
Lab Ware

LabeWare LIMS

- Store patient demographics
- Store testing data
- Store patient test results
- Store provider information
- Store reagent information
- Store Quality Control information
- Send report to provider
- Send special reports to Public Health Departments
- Quality Control reports
- Query database tables*

Data screen in AREV

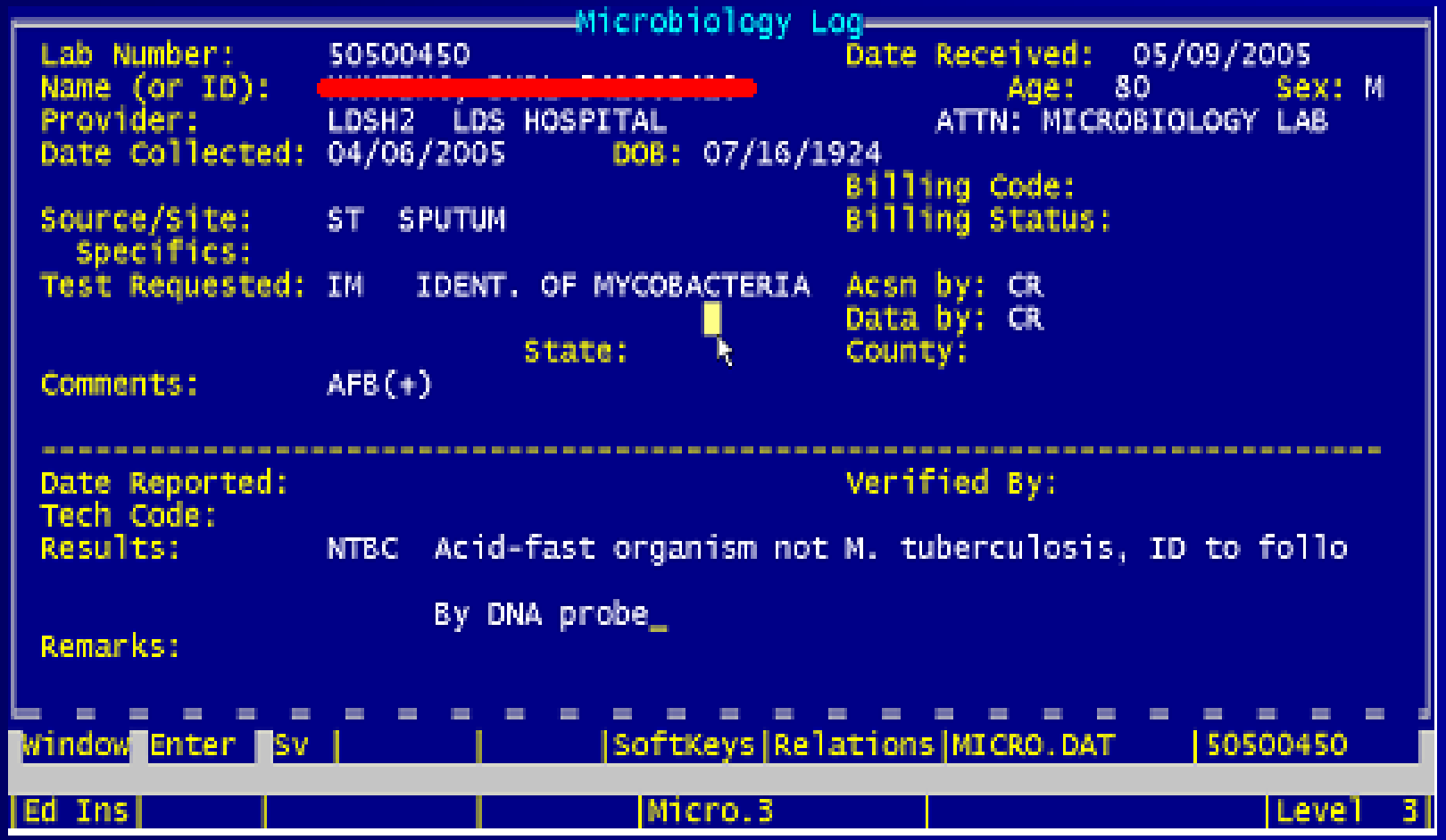

Work Card from Bacteriology

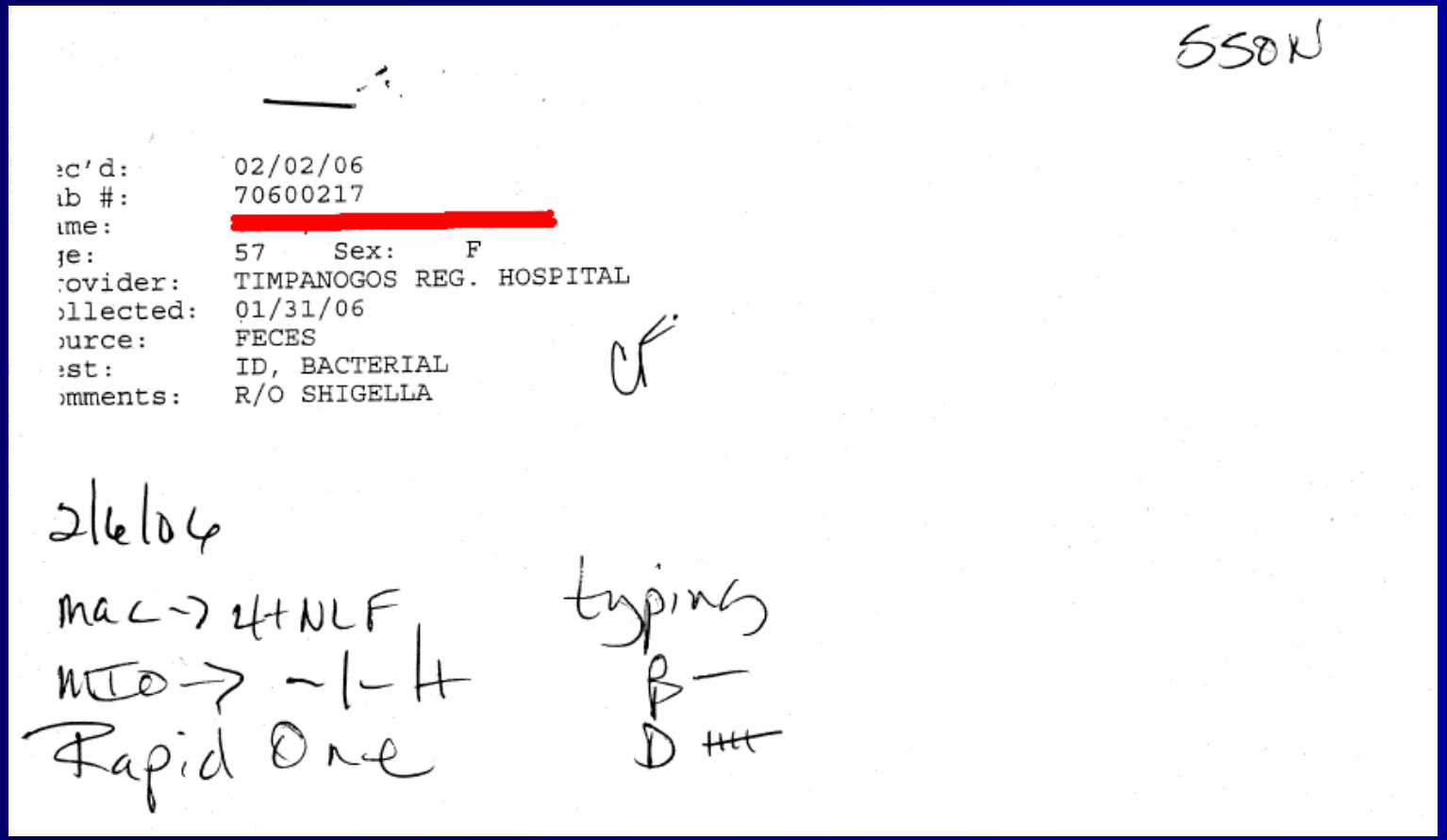

SSON

ec'd:	02/02/06
ab #:	70600217
ame:	[redacted]
ge:	57 Sex: F
rovider:	TIMPANOGOS REG. HOSPITAL
ollected:	01/31/06
ource:	FECES
est:	ID, BACTERIAL
omments:	R/O SHIGELLA

CF

2/6/06

mac -> 4+NLF

MIO -> -/-/+

Rapid One

typing

β —

D ++++

Testing Records

Labwear LIMS

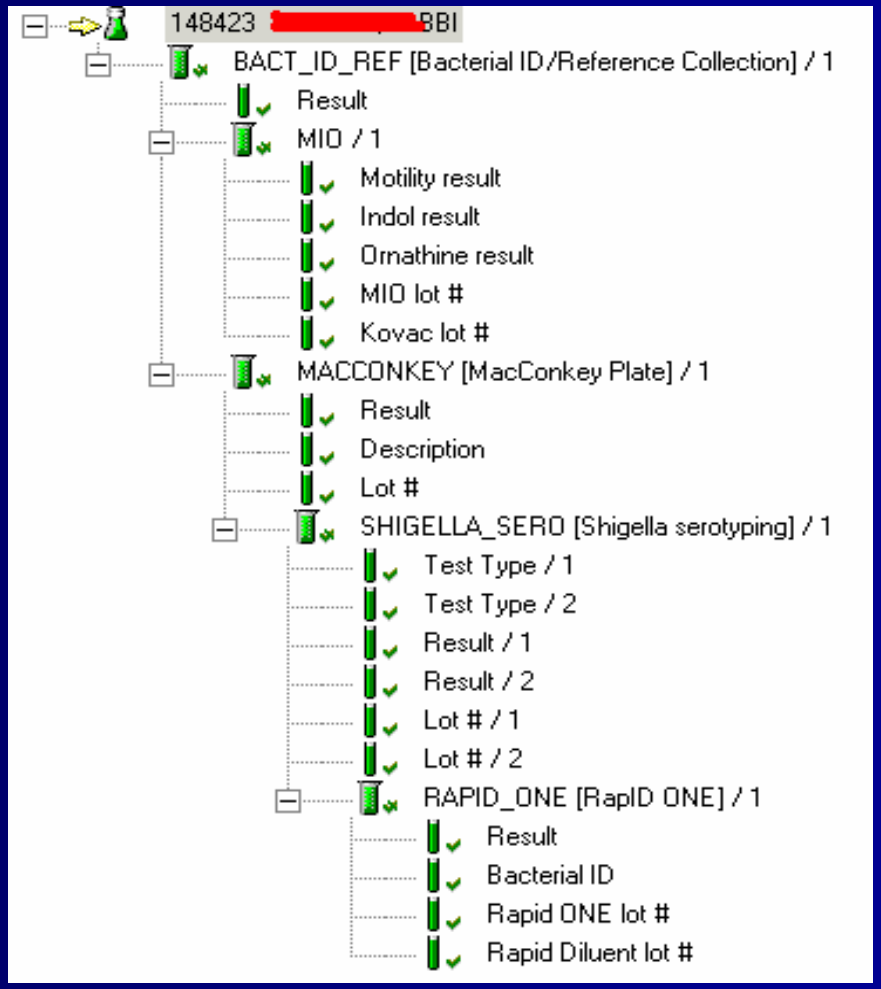

Labware LIMS MIO Detail

MIO / 1	Version 10	Authorized
Date Completed	08/07/2008 10:36:01 AM	
Date Reviewed	08/08/2008 05:23:47 PM	CKFISHER
Motility result	Negative	
Indol result	Negative	
Ornathine result	Negative	
MIO lot #	HARDY-MIO-08064	
Kovac lot #	HARDY-07354	
Date Received	08/06/2008 02:55:30 PM	
Changed On	08/08/2008 05:24:05 PM	
Date Completed	08/07/2008 10:36:01 AM	

MIO QC Detail

QC_PASS_FAIL / 1	
Lot QC result	Pass
QC organism 1 ID	Escherichia coli ATCC 25922
QC organism 2 ID	Klebsiella pneumoniae ATCC 33495
QC organism 1 result	motile+, indole-red, ornithine-purple
QC organism 2 result	non-motile, indole-yellow, ornithine-yellow
Sterility Test result	No growth seen

Utah Department of Health

Utah Public Health Laboratories
46 North Medical Drive
Salt Lake City, Utah 84113-1105
Telephone: (801) 584-8400
Fax:(801) 584-8501

Patient Information

Patient Name: [redacted]
Patient ID #: [redacted]
Sex: FEMALE
Date Of Birth: [redacted]
Age: 78
State of Origin: UT
Order #: 0000117170

Sample Collection Information

Lab Number: 148423
Source: Stool
Specifics:
Date Collected: 07/18/2008
Date Received: 08/06/2008
Date Released: 08/08/2008
Date Reported: 08/09/2008

PROVIDER CODE: IMC2

INTERMOUNTAIN CENTRAL LAB-MICRO
MICROBIOLOGY LAB
PO BOX 57970
MURRAY, UT 84157-0970

Test Results

Test Run: **Bacterial ID/Reference Collection**
Result: **SHIGELLA sonnei**

INTERMOUNTAIN CENTRAL LAB-MICRO
MICROBIOLOGY LAB
PO BOX 57970
MURRAY, UT 84157-0970

D_-14842[redacted]50705668_IMC2-135454.pdf

Pending Report

8/7/2008

DAILY BACTERIOLOGY PENDING REPORT

Login Dates From: 06-Aug-2008 To: 06-Aug-2008

Samp Numb	Patient Name	Sex	Age	Cust ID and Desc	Collected	Source	Comments/Presumptive
148158	[redacted]	F	5	LRMC: LOGAN REG. HOSPITAL	08/02/2008	NOT_SPECIF	CAMPYLOBAC
148420	[redacted]	F	3	ARUP1: ARUP MICROBIOLOGY	08/04/2008	NOT_SPECIF	SHIGELLA
148421	[redacted]	M	53	LRMC: LOGAN REG. HOSPITAL	07/26/2008	NOT_SPECIF	CAMPYLOBAC
148422	[redacted]	M	0	IMC2: INTERMOUNTAIN CENTRAL LAB-MICRO	08/01/2008	STOOL	SALMONELLA
148423	[redacted]	F	78	IMC2: INTERMOUNTAIN CENTRAL LAB-MICRO	07/18/2008	STOOL	SHIGELLA
148481	[redacted]	F	66	SMH1: ST MARK'S HOSPITAL	08/01/2008	STOOL	SALMONELLA

Daily Positive Report

8/9/2008

DAILY BACTERIOLOGY POSITIVE REPORT

Login Dates From: 08-Aug-2008 To: 08-Aug-2008

Samp_Numb	Patient_Name	Sex	Age	DOB	Cust ID and Desc	Collected	Source	Result Description
142497	[redacted]	M	24	07/13/1984	QUES: QUEST DIAGNOSTICS INC.	07/22/2008	STOOL	SALMONELLA enteritidis
144019	[redacted]	F	35		IMC2: INTERMOUNTAIN CENTRAL LAB-MICRO	07/27/2008	URINE	SALMONELLA saintpaul
147066	[redacted]	F	83	02/09/1925	ARUP1: ARUP MICROBIOLOGY	07/23/2008	STOOL	SHIGELLA flexneri
147900	[redacted]	F	14	09/22/1993	PCMC1: PRIMARY CHILDREN'S MEDICAL CENTER	08/03/2008	CERVIX	NEISSERIA gonorrhoeae
148423	[redacted]	F	78	12/20/1929	IMC2: INTERMOUNTAIN CENTRAL LAB-MICRO	07/18/2008	STOOL	SHIGELLA sonnei
149525	[redacted]	M	40	11/25/1967	ARUP1: ARUP MICROBIOLOGY	07/27/2008	SPUTUM	LEGIONELLA pneumophila group 1
149738	[redacted]	M	2	02/13/2006	ACLL: LABORATORY CORP. OF AMERICA	08/01/2008	STOOL	ESCHERICHIA coli, O157:H7

Ad hoc Queries

- In Labware LIMS all queries must be written by a programmer.
- We have a selection of basic queries that we can work with.
- If a request for information does not fit into one of our choices we have to request programming time to have the query written.

What's Next

- Direct transfer of data into provider and health department database (HL7).
- Providers will be able to order tests electronically.